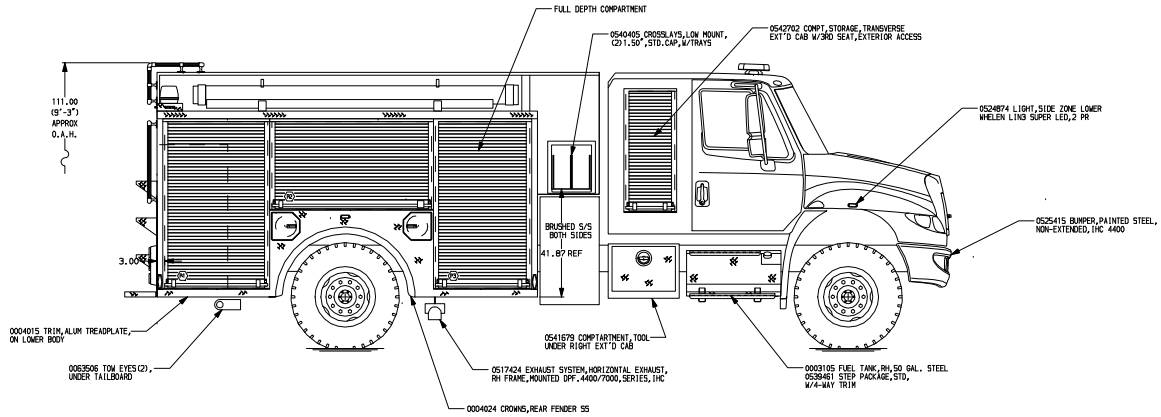

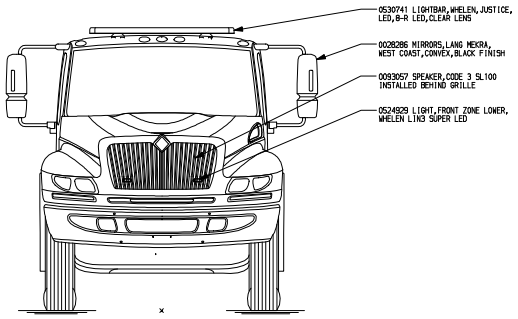

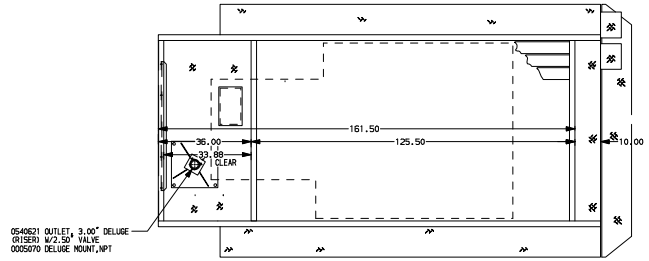

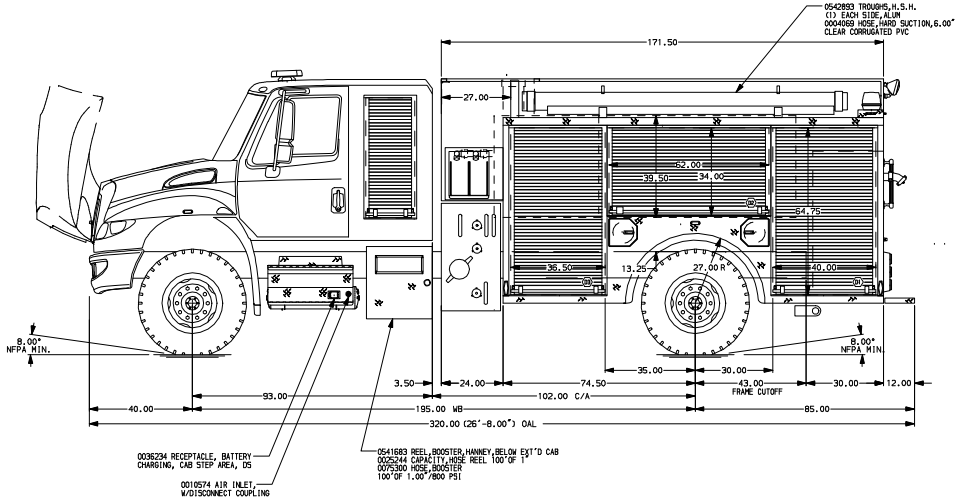

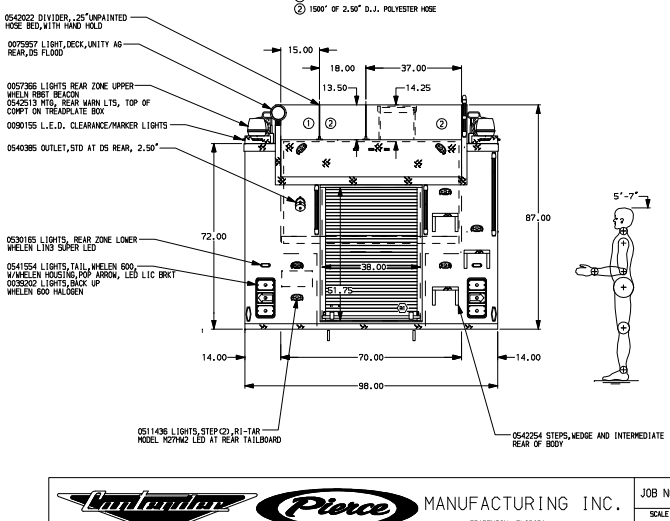

ALUMINUM BODY

NOTE
DIMENSIONS SHOWN ARE APPROXIMATE AND ARE SUBJECT TO MINOR DEVIATIONS AS MAY OCCUR OR BE NECESSARY IN CONSTRUCTION.
MINOR DETAILS NOT SHOWN.

1000 GAL=1882673

REV	DATE	BY	CH
▽	-	-	-

Londonderry Pierce MANUFACTURING INC.
BRADENTON, FLORIDA

CHASSIS DATA	TITLE	1250-D-1000 POLY 148.5"BODY DS & PS FULL HEIGHT (2)SPEEDLAYS	
MAKE IHC	FOR	PIERCE STOCK APPLETON, WISCONSIN	
MODEL 4400	DWG NO.	21034AD	

JOB NO.	21034
SCALE 1:24	DATE
DRAWN BY DTA	06NOV08
CHECKED BY AIV	06NOV08
SHEET SIZE D	SHEET NO. 1 OF 1