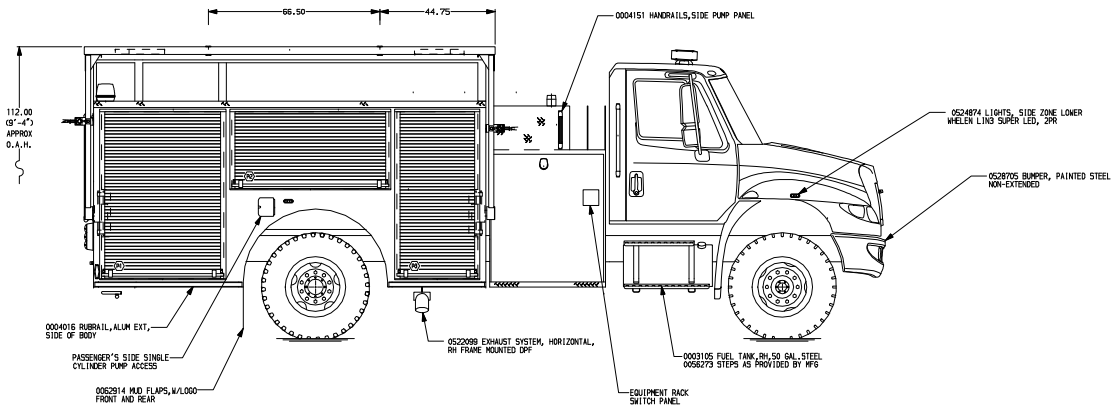

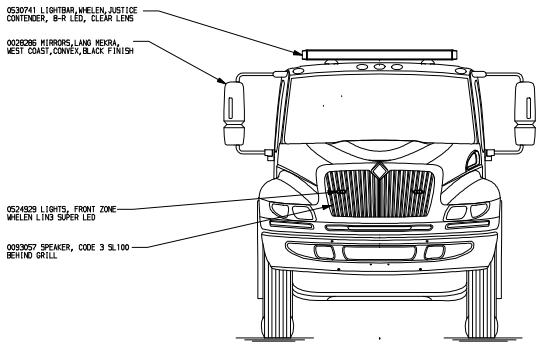

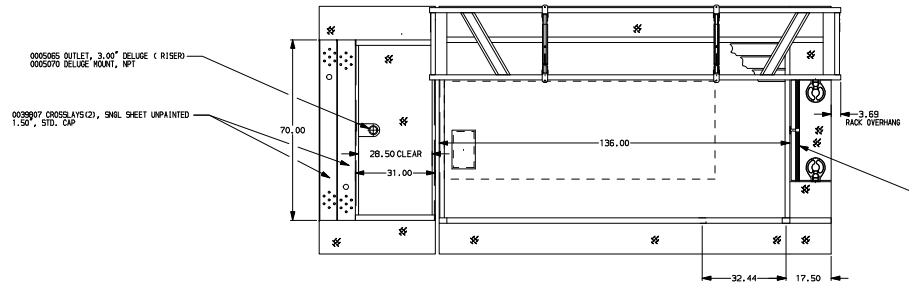

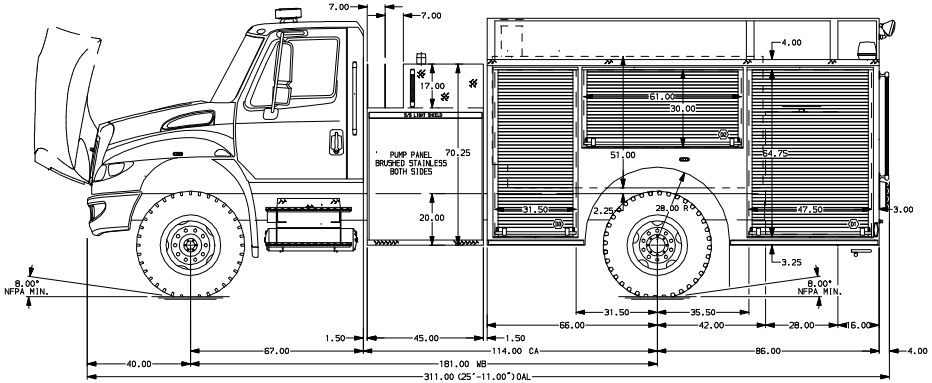

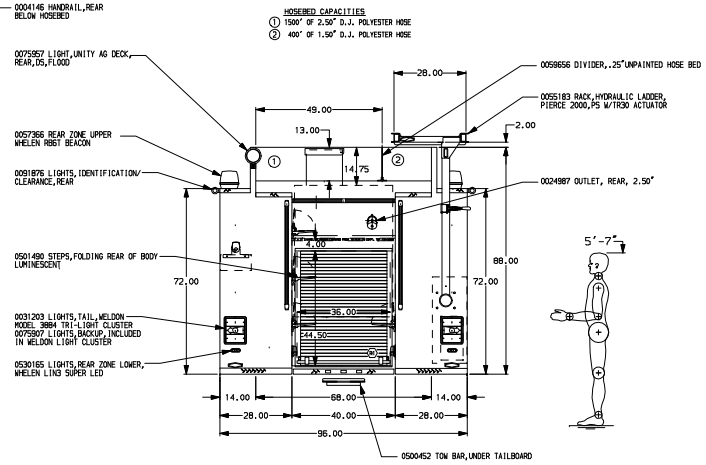

ALUMINUM BODY

NOTE

DIMENSIONS SHOWN ARE APPROXIMATE AND ARE SUBJECT TO MINOR DEVIATIONS AS MAY OCCUR OR BE NECESSARY IN CONSTRUCTION.
MINOR DETAILS NOT SHOWN.

Contender Pierce MANUFACTURING INC.
BRADENTON, FLORIDA

				CHASSIS DATA	TITLE	1250-D-750 POLY, 152 BODY DS & PS FULL HT & DPTH 45 SIDE CONTROL, (2) CROSSLAYS	
				CHASSIS IHC	FOR	PIERCE MANUFACTURING INC. BRADENTON,FLORIDA	
REV.	DATE	BY	CHK'D	MODEL 4400	DRWG. NO.	9222149	

JOB NO.	9222149
DATE	SCALE 1:24
25MAY06	DRAWN BY DTA
25MAY06	CHK'D BY JCR
SHEET NO. 1 OF 1	SHEET SIZE D